Reference Gages

Length Standards Brought to You by Mitutoyo

Precision Levels
SERIES 960

- High-precision longitudinal and transverse vials make it possible to check or level surfaces.

SPECIFICATIONS

Order No.	Sensitivity (mm/m)	Dimensions (W×D×H) (mm)
960-603	0.02	200×44×38.2
960-703	0.02	200×44×200

Technical Data

- Accuracy of graduations: ±0.7 DIV (**960-603**), ±0.3 DIV (**960-703**)

960-603

960-703

Bench Centers
SERIES 967

FEATURES

- Used with a dial test indicator (optional), these Bench Centers provide precision measurement of concentricity on cylindrical workpieces.
- With an indicator clamp. (Holding stem diameter: 8 mm)

Dimensions

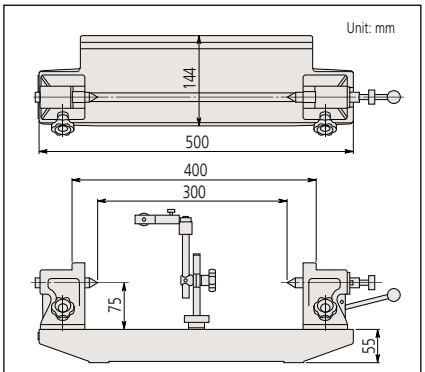

967-201-10

Technical Data

- Maximum workpiece length: 300 mm
- Maximum workpiece dia.: 150 mm
- Mass: 13 kg

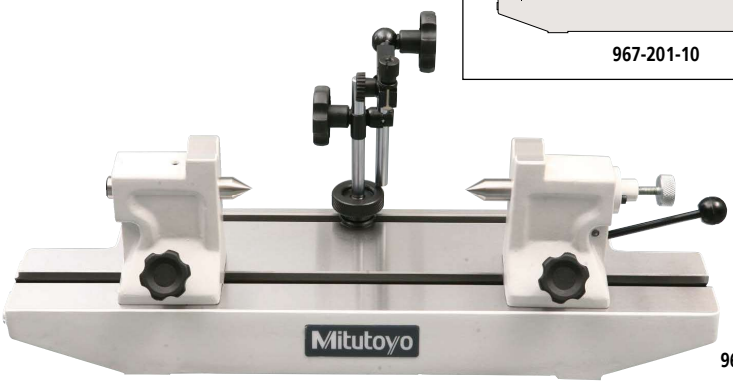

967-201-10

E

Mitutoyo reserves the right to change any or all aspects of any product specification, including prices, designs and service content, without notice.