Dial Test Indicator
SERIES 513 — Universal Type

Set Configuration: Metric

Full set

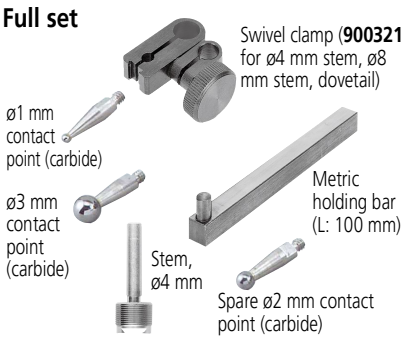

Basic set

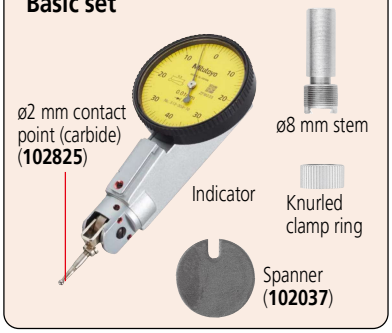

Set Configuration: Inch

Full set

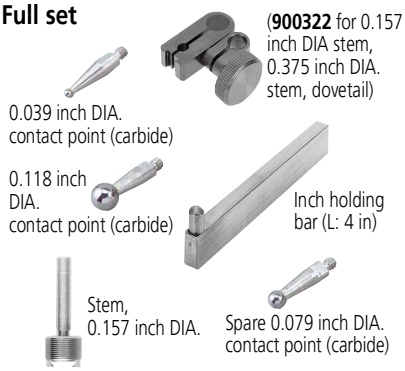

Basic set

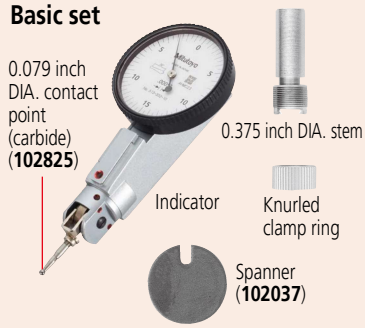

Optional Accessories

- Swivel clamps (See page F-75)
- Holding bars (See page F-75)
- Stems (See page F-75)

102824: ø1 mm contact point (carbide)
102825: ø2 mm contact point (carbide)
102826: ø3 mm contact point (carbide)

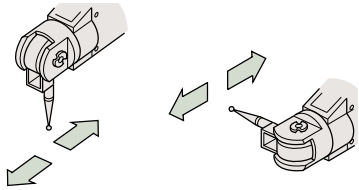

- The direction of the probe movement can be freely changed by rotating the contact point section of the indicator.

513-304-10E

SPECIFICATIONS

Metric

Order No. Basic set	Order No. Full set	Graduation (mm)	Range (mm)	Dial reading	Maximum permissible error (MPE)* (µm) Measuring range	One rev.	10 scale divisions	Hysteresis	Repeatability	Mass (g)	Measuring force (N)	High accuracy	With revolution counter	Long contact point	Standard	Double scale spacing	Compact	Dustproof	Carbide contact point	Ruby contact point
513-304 -10E	**513-304-10T**	0.01	0.8	0-40-0	9	—	5	4	3	71	0.3 or less								✔	

Inch

Order No. Basic set	Order No. Full set	Graduation (in)	Range (in)	Dial reading	Maximum permissible error (MPE)* (in) One rev.	Hysteresis	Repeatability	Mass (g)	Measuring force (N)	High accuracy	With revolution counter	Long contact point	Standard	Double scale spacing	Compact	Dustproof	Carbide contact point	Ruby contact point
513-302-10E	**513-302-10T**	0.0005	0.03	0-15-0	±0.0005	0.0003	±0.0003	71	0.3 or less								✔	

* The accuracy is guaranteed when used with the dial face facing upward and the contact point oriented as shown in the figure.
Note: **513-3XX-10** is indicated on the dial face. But the Order No. for the set provided with the stem etc. has a suffix (E or T) at the end.

DIMENSIONS

Unit: mm

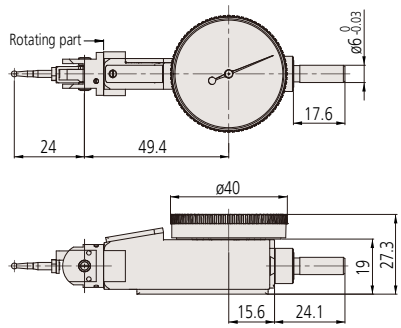

513-304-10E

Note: A slight difference may occur depending on the center of the contact point, graduation plate, and stem fixing position, etc.

Mitutoyo reserves the right to change any or all aspects of any product specification, including prices, designs and service content, without notice.

Mitutoyo